DIAGRAM OF PASSENGER CAR TRADE/COMMERCE

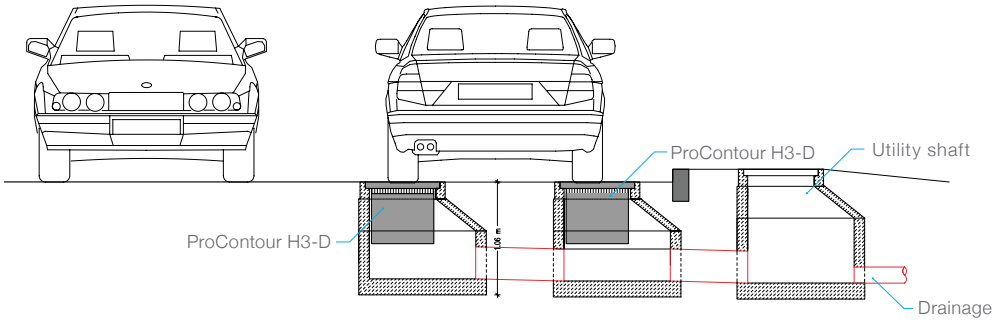

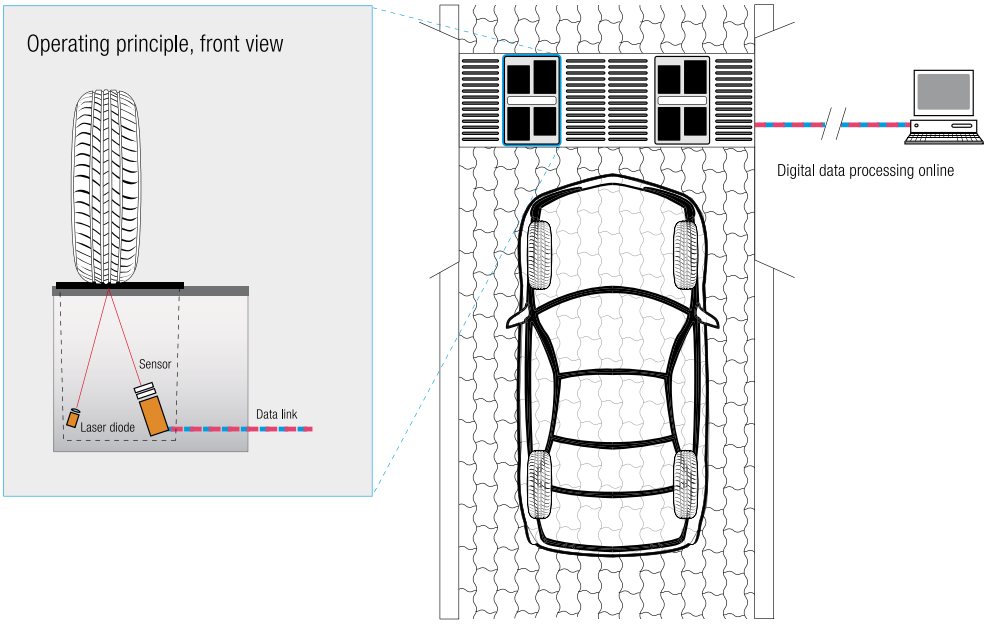

ProContour GmbH
Daimlerstraße 9-11
D - 79761 Waldshut-Tiengen
Tel +49 7741 91789 - 0
Fax +49 7741 91789 - 9
info@procontour.com
www.procontour.com